PEDALS, BRAKE
24, CONQUEST

7705 200

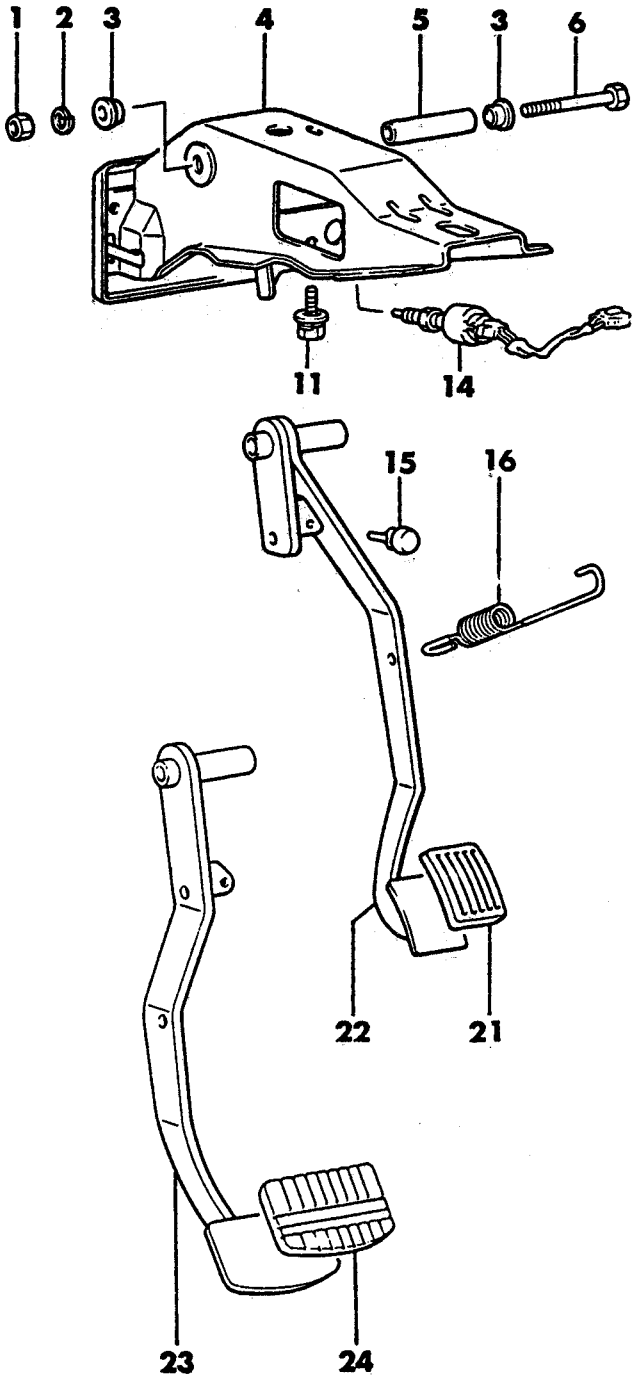

AUTO. TRANS.

NOT FOR RESALE - UNKNOWN SOURCE - DOWNLOADED FOR FREE FROM:
WWW.STARQUESTGARAGE.COM

ITEM	PART NUMBER	QTY	BODY	MODEL	DESCRIPTION
			PEDALS, BRAKE 24, CONQUEST		
1	MF43 0122	2			NUT
2	MF45 0406	2			WASHER, Spring (10)
3	MB05 8634	4			BUSHING, Pedal
4	MB50 0896	1			MEMBER, Pedal Support, Auto. Trans.
5	MB15 1138	1			SPACER
6	MF10 4902	1			BOLT, (10x100)
11	MS24 0125	3			BOLT, w/Washer (8x20)
14	MB48 7644	1			SWITCH, Stop Lamp
15	MB15 1298	1			STOPPER, Brake Pedal
16	MB15 1295	1			SPRING, Return
21	MA12 6093	2			PAD, Pedal, Manual Trans.
22	MB15 1145	1			PEDAL, Brake, Manual Trans.
23	MB15 1146	1			PEDAL, Brake, Auto. Trans.
24	MA15 2260	1			PAD, Pedal, Auto. Trans.

NOT FOR RESALE - UNKNOWN SOURCE - DOWNLOADED FOR FREE FROM:
WWW.STARQUESTGARAGE.COM

7705 700

BOOSTER, POWER BRAKE
24, CONQUEST, W/O ANTI SKID
1987 MODEL

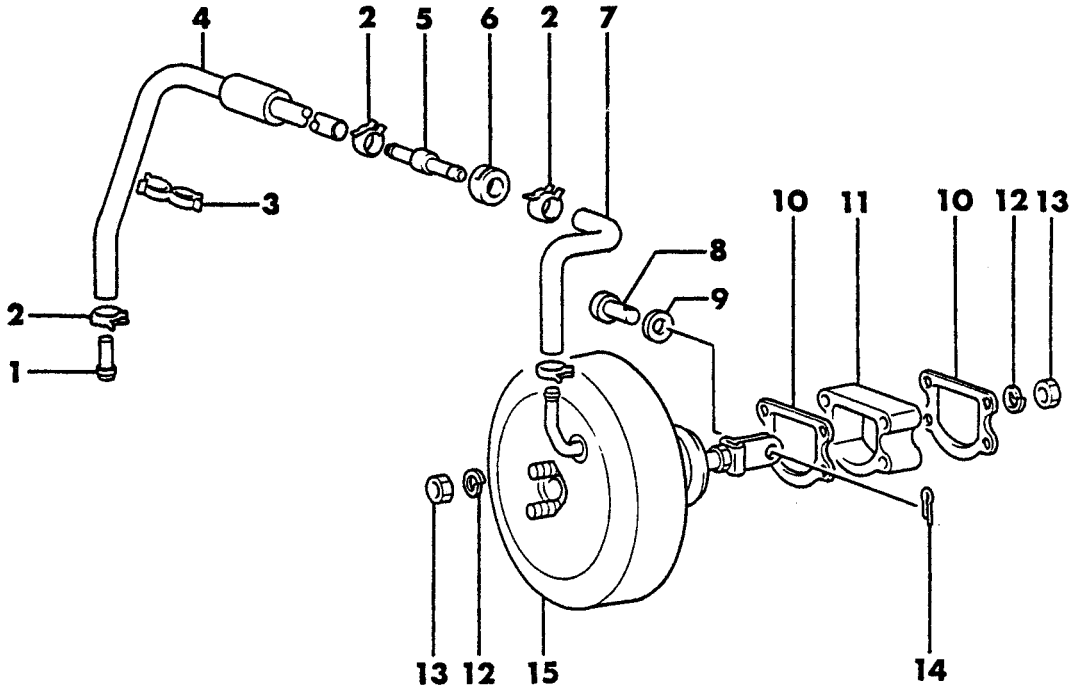

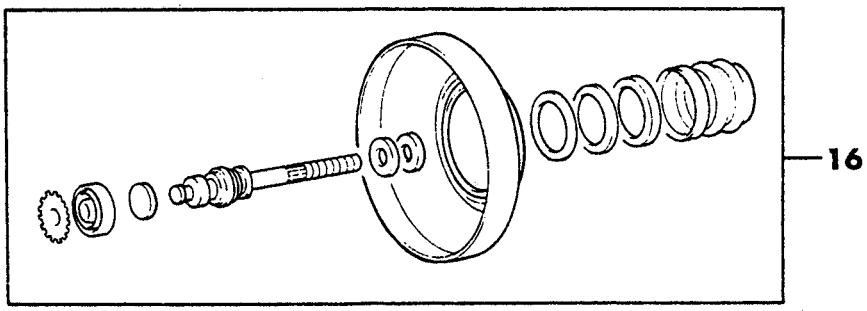

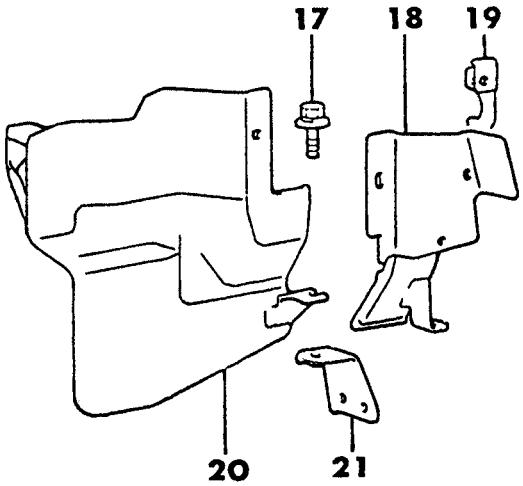

NOT FOR RESALE - UNKNOWN SOURCE - DOWNLOADED FOR FREE FROM:
WWW.STARQUESTGARAGE.COM

ITEM	PART NUMBER	QTY	BODY	MODEL	DESCRIPTION
					BOOSTER, POWER BRAKE 24, CONQUEST, W/O ANTI SKID 1987 MODEL
1	MA14 0192	1			FITTING
2	MB05 8828	4			CLIP, Hose
3	MB19 3490	1			CLIP, Hose
4	MB19 3508	1			HOSE, Vacuum
5	MB23 8892	1			VALVE, Check
6	MB15 1352	1			PAD
7	MB05 8667	1			HOSE, Vacuum
8	MF47 3000	1			PIN, Clevis (10x23)
9	MF45 0006	1			WASHER, Plain (10)
10	MB04 4865	2			SEALER
11	MB00 4501	1			SPACER, Booster
12	MF45 0405	4			WASHER, Spring (8)
13	MF43 0005	4			NUT, (8)
14	MF47 2042	1			PIN, Split (2x30)
15	MB23 8610	1			BOOSTER, Brake
16	MB13 4737	1			BOOSTER BRAKE KIT, Repair
17	MF24 3622	6			BOLT, w/Washer
18	MB27 7706	1			PROTECTOR, Brake Line Heat (4 Studs)
	MB43 8085	1			PROTECTOR, Brake Line Heat (5 Studs)
19	MB27 7377	1			SUPPORT, Heat Protector
20	MB31 6403	1			PROTECTOR, Brake Line
21	MB15 1444	1			SUPPORT, Heat Protector

NOT FOR RESALE - UNKNOWN SOURCE - DOWNLOADED FOR FREE FROM:
WWW.STARQUESTGARAGE.COM

BOOSTER, POWER BRAKE
24, CONQUEST, W/ANTI-SKID

7705 800

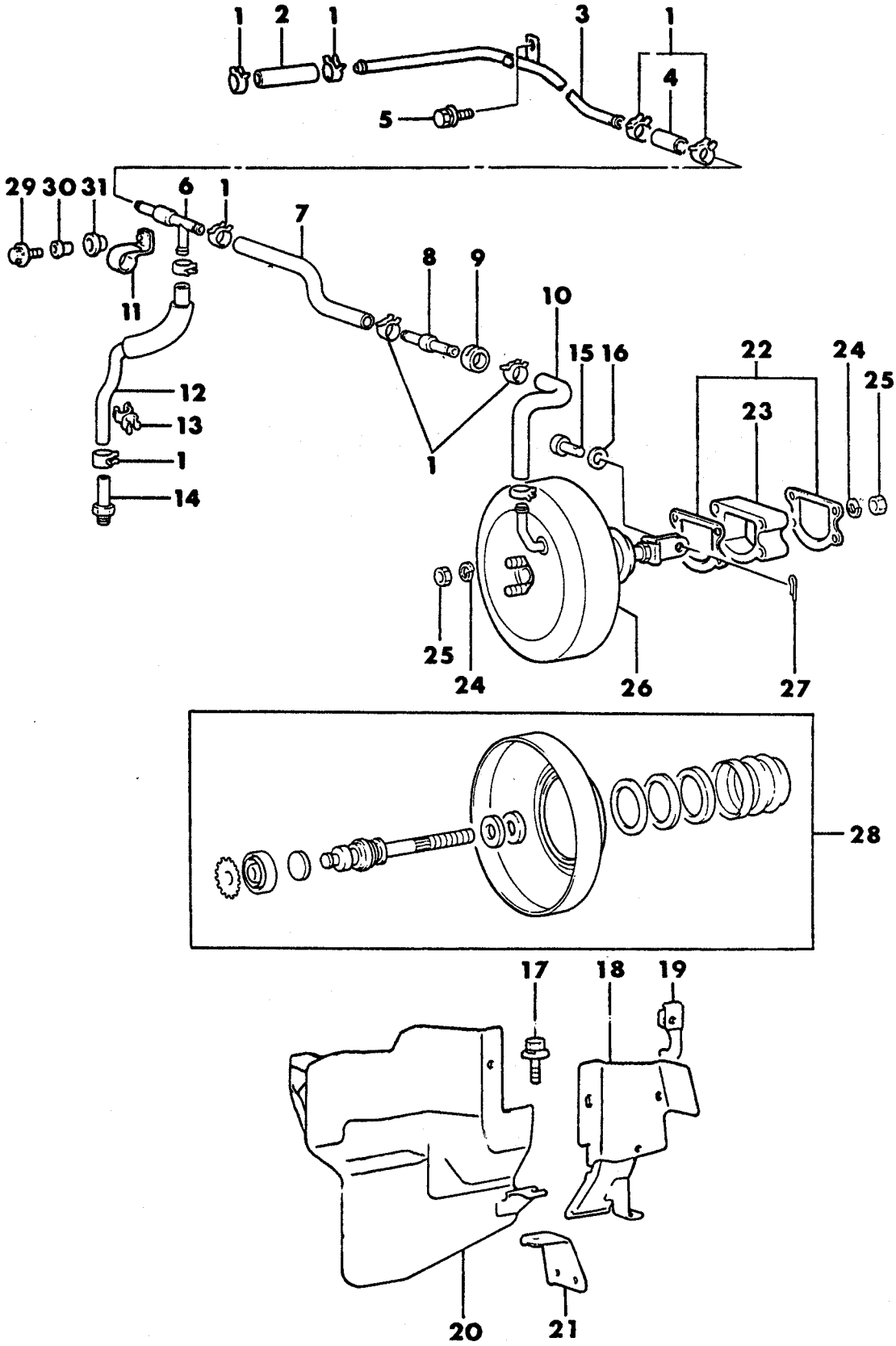

NOT FOR RESALE - UNKNOWN SOURCE - DOWNLOADED FOR FREE FROM:
WWW.STARQUESTGARAGE.COM

ITEM	PART NUMBER	QTY	BODY	MODEL	DESCRIPTION
					BOOSTER, POWER BRAKE 24, CONQUEST, W/ANTI-SKID
1	MB05 8828	10			CLIP, Hose
2		1			HOSE, Vacuum (9x105)
3	MB27 7703	1			PIPE, Vacuum
4	MB15 1034	1			HOSE, Vacuum (9x45)
5	MF24 3622	2			BOLT, w/Washer (6X12)
6	MB23 8563	1			VALVE, Check
7	MB27 7701	1			HOSE, Vacuum
8	MB23 8892	1			VALVE, Check
9	MB15 1352	1			PAD
10	MB05 8667	1			HOSE, Vacuum
11	MB31 6906	1			CLIP
12	MB27 7702	1			HOSE, Vacuum
13	MB19 3490	1			CLIP, (18-23)
14	MA14 0192	1			FITTING
15	MF47 3000	1			PIN, Clevis (10x23)
16	MF45 0006	1			WASHER, Plain (10)
17	MF24 3622	6			BOLT, w/Washer (6x12)
18	MB27 7706	1			PROTECTOR, Brake Line Heat (4 Studs), 1987
	MB43 8085	1			PROTECTOR, Brake Line Heat (5 Studs)
19	MB27 7377	1			SUPPORT, Heat Protector
20	MB31 6403	1			PROTECTOR, Brake Line Heat
21	MB15 1444	1			SUPPORT, Heat Protector
22	MB04 4865	2			SEALER
23	MB00 4501	1			SPACER, Booster
24	MF45 0405	4			WASHER, Spring (8)
25	MF43 0005	4			NUT, (8)
26	MB23 8610	1			BOOSTER, Brake
27	MF47 2042	1			PIN, Split (2x30)
28	MB13 4737	1			BOOSTER BRAKE KIT, Repair
29	MF24 0027	1			BOLT, w/Washer (6x20)
30	MB31 6901	1			SPACER
31	MB31 6905	1			INSULATER

NOT FOR RESALE - UNKNOWN SOURCE - DOWNLOADED FOR FREE FROM:
WWW.STARQUESTGARAGE.COM

MASTER CYLINDER, BRAKE
24, CONQUEST

7705 1400

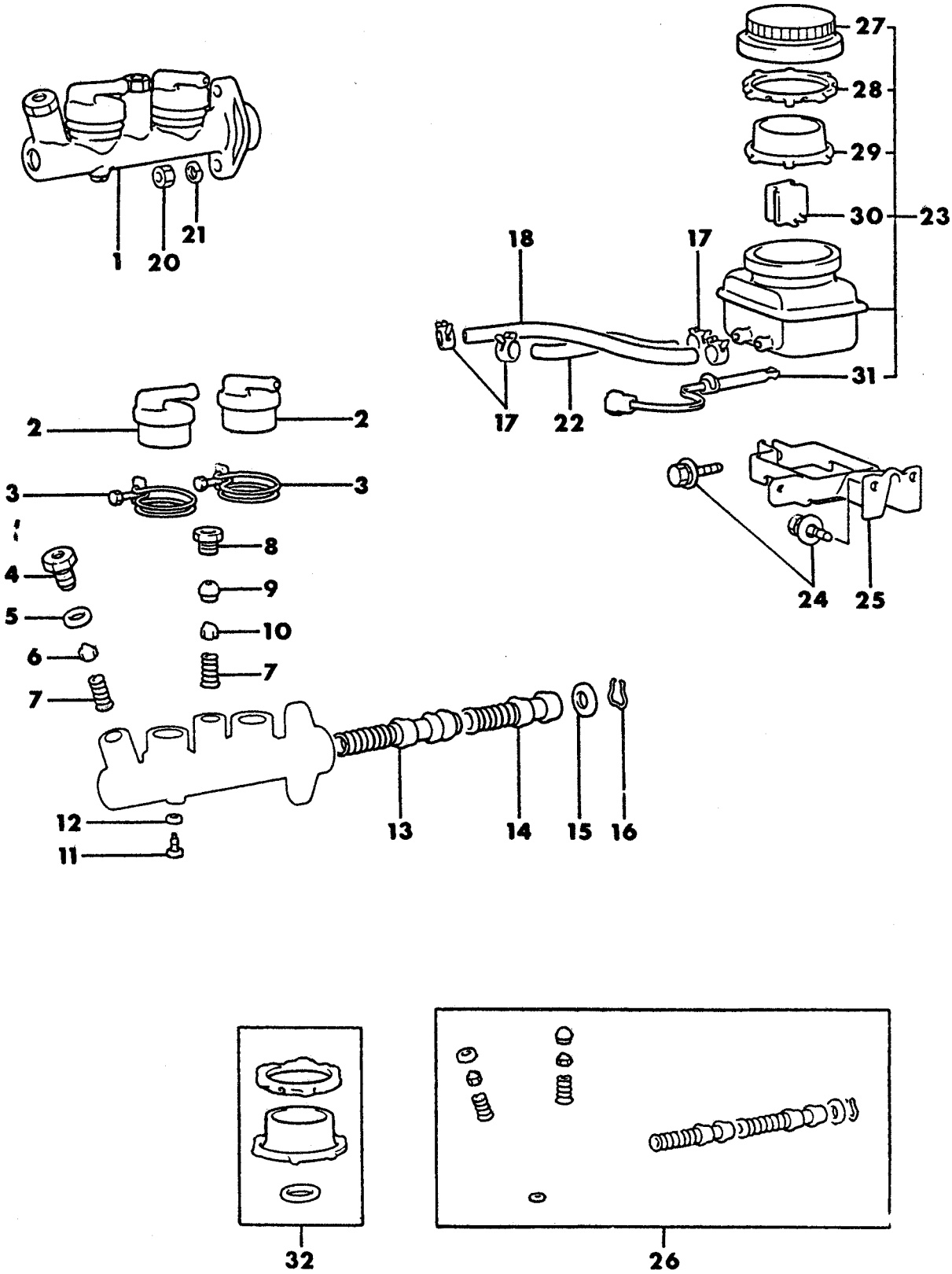

NOT FOR RESALE - UNKNOWN SOURCE - DOWNLOADED FOR FREE FROM:
WWW.STARQUESTGARAGE.COM

ITEM	PART NUMBER	QTY	BODY	MODEL	DESCRIPTION
					MASTER CYLINDER, BRAKE 24, CONQUEST
1	MB31 6779	1			CYLINDER, Brake Master, 1987
	MB53 4701	1			CYLINDER, Brake Master, 1988
2	MB05 8401	2			COLLAR, Master Cyl.
3	MB01 2155	2			BAND, Reservoir
4	MA16 1537	1			CASE, Check Valve, 1987
	MB53 4789	1			CASE, Check Valve, 1988
5	MA14 3404	1			GASKET, Check Valve
6	MB00 3850	2			VALVE, Check, 1987
7		2			SPRING, Check Valve (Serv. Kit), 1987
8	MB19 3290	1			CAP, Check Valve
9	MA18 1940	1			SEAT, Tube, 1987
	MB36 6739	1			SEAT, Tube, 1988
10	MB00 3850	1			VALVE, Check, 1987
11	MB05 8186	1			STOPPER, Piston
12		1			GASKET, (Serv. Kit)
13		1			PISTON, Secondary (Serv. Kit)
14		1			PISTON, Primary (Serv. Kit)
15		1			PLATE, Piston Stopper (Serv. Kit)
16		1			RING, Piston Stopper (Serv. Kit)
17	MT18 7422	4			CLIP, Hose
18	MB08 2024	1			HOSE, Reservoir
20	MF43 0005	2			NUT, (8)
21	MF45 0405	2			WASHER, Spring (8)
22	MB08 2024	1			HOSE, Reservoir
23	MB15 1289	1			RESERVOIR, Oil
24	MS24 0125	3			BOLT, w/Washer (8x20)
25	MB15 1177	1			HOLDER, Reservoir
26	MB23 8245	1			REPAIR KIT, Master Cylinder, 1987
	MB53 4780	1			REPAIR KIT, Master Cylinder, 1988
27	MB31 6890	1			CAP, Reservoir, Use Up to Aug. 1986, 1987 Model
	MB53 4261	1			Use After Aug. 1986
28					RING, Slide (Serv. Kit), 1987
29					DIAPHRAGM, (Serv. Kit)
30	MB15 1326	1			FLOAT
31	MB15 1330	1			SWITCH, Level Indicator
32	MB18 5478	1			SEAL KIT, Master Cylinder, Use Up to Aug. 1986, 1987 Model
	MB53 4268	1			Use After Aug. 1986, 1987 Model
	MB52 7784	1			SEAL KIT, Master Cylinder, 1988

ENGINE: Blank=All; Q=1500 cc; K=1600 cc (w/o Balance Shaft); W=2600 cc (Truck); A=2000 cc; F=2600 cc (Car)

TRANS: Blank=All; A=Automatic; M=All Manual; 4=4-Speed Manual; 5=5-Speed Manual; 8=4 x 2 Manual

SERIES: L=Low; M=Medium; H=High; P=Premium; S=Special

MODELS: 24 FWD=2-Dr Hatchback (Colt); 24 RWD=2-Dr Hatchback (Conquest); 41 FWD=4-Dr Sedan (Colt & Eagle Vista); 27 RWD-4WD=Pickup (Ram 50, Power Ram 50); 27 4WD=Sport Utility (Raider); 45 FWD=4-Dr Station Wagon (Colt); 45 FWD-4WD=Station Wagon (Vista)

AR=Use as Required # =New Part Number — =Non Illustrated Part

NOT FOR RESALE - UNKNOWN SOURCE - DOWNLOADED FOR FREE FROM:
WWW.STARQUESTGARAGE.COM

LINES AND HOSES, BRAKE
24, CONQUEST (W/O ANTI-SKID)
1987 MODEL

7705 1900

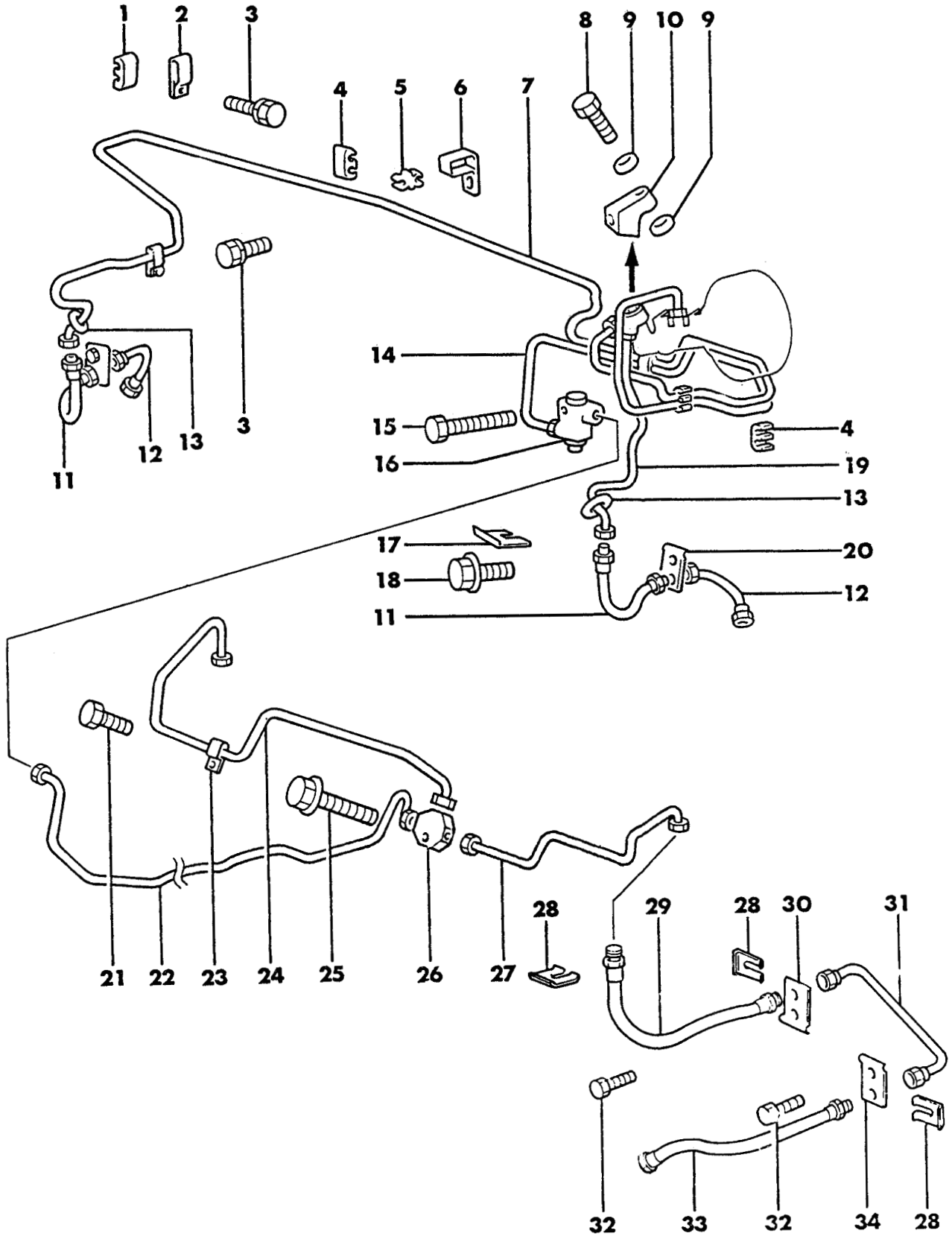

NOT FOR RESALE - UNKNOWN SOURCE - DOWNLOADED FOR FREE FROM:
WWW.STARQUESTGARAGE.COM

LINES AND HOSES, BRAKE
24, CONQUEST (W/O ANTI-SKID)
1987 MODEL

ITEM	PART NUMBER	QTY	BODY	MODEL	DESCRIPTION
1	MB08 2164	4			CLIP
2	MB15 1280	3			CLIP
3	MF24 0024	5			BOLT, w/Washer (6x14)
4	MB12 9999	2			CLIP
5	MB15 1343	2			CLIP
6	MB15 1350	2			CLIP
7	MB27 7339	1			TUBE, Front Brake, Rt.
8	MB04 4861	1			BOLT, Connector
9	MA11 1832	2			GASKET
10	MB04 3947	1			CONNECTOR
11	MB23 8154	2			HOSE, Brake
12	MB23 8151	2			HOSE, Brake
13	MS81 0053	2			GROMMET, (6)
14	MB19 3945	1			TUBE, Brake
15	MF24 1236	1			BOLT, w/Washer (6x40)
16	MB08 2428	1			VALVE, Proportioning
	MB05 8447	1			VALVE, Proportioning, w/Turbo
17	MA43 1825	4			CLIP, Hose
18	MF24 0050	2			BOLT, w/Washer (8x14)
19	MB27 7338	1			TUBE, Brake
20	MB19 3591	2			PLATE, Brake
21	MS24 0141	3			BOLT, w/Washer (6x16)
22	MB18 1781	1			PIPE
23	MB04 4570	3			CLIP
24	MB19 3445	1			TUBE, Brake Rear, Rt.
25	MF14 0027	1			BOLT, w/Washer (8x30)
26	MB05 8210	1			CONNECTOR, 3-Way
27	MB19 3444	1			TUBE, Brake Rear, Lt.
28	MA43 1825	6			CLIP, Hose
29	MB23 8160	2			HOSE, Brake
30	MB23 8255	2			PLATE, Brake
31	MB23 8252	1			TUBE, Brake Rear, Lt.
	MB23 8253	1			TUBE, Brake Rear, Rt.
32	MF24 0050	4			BOLT, w/Washer (8x14)
33	MB23 8153	2			HOSE, Brake (4 Stud)
	MB23 8159	2			HOSE, Brake (5 Stud)
34	MB19 3591	1			PLATE

NOT FOR RESALE - UNKNOWN SOURCE - DOWNLOADED FOR FREE FROM:
WWW.STARQUESTGARAGE.COM

LINES AND HOSES, BRAKE
24, CONQUEST (W/ANTI-SKID)

7705 2000

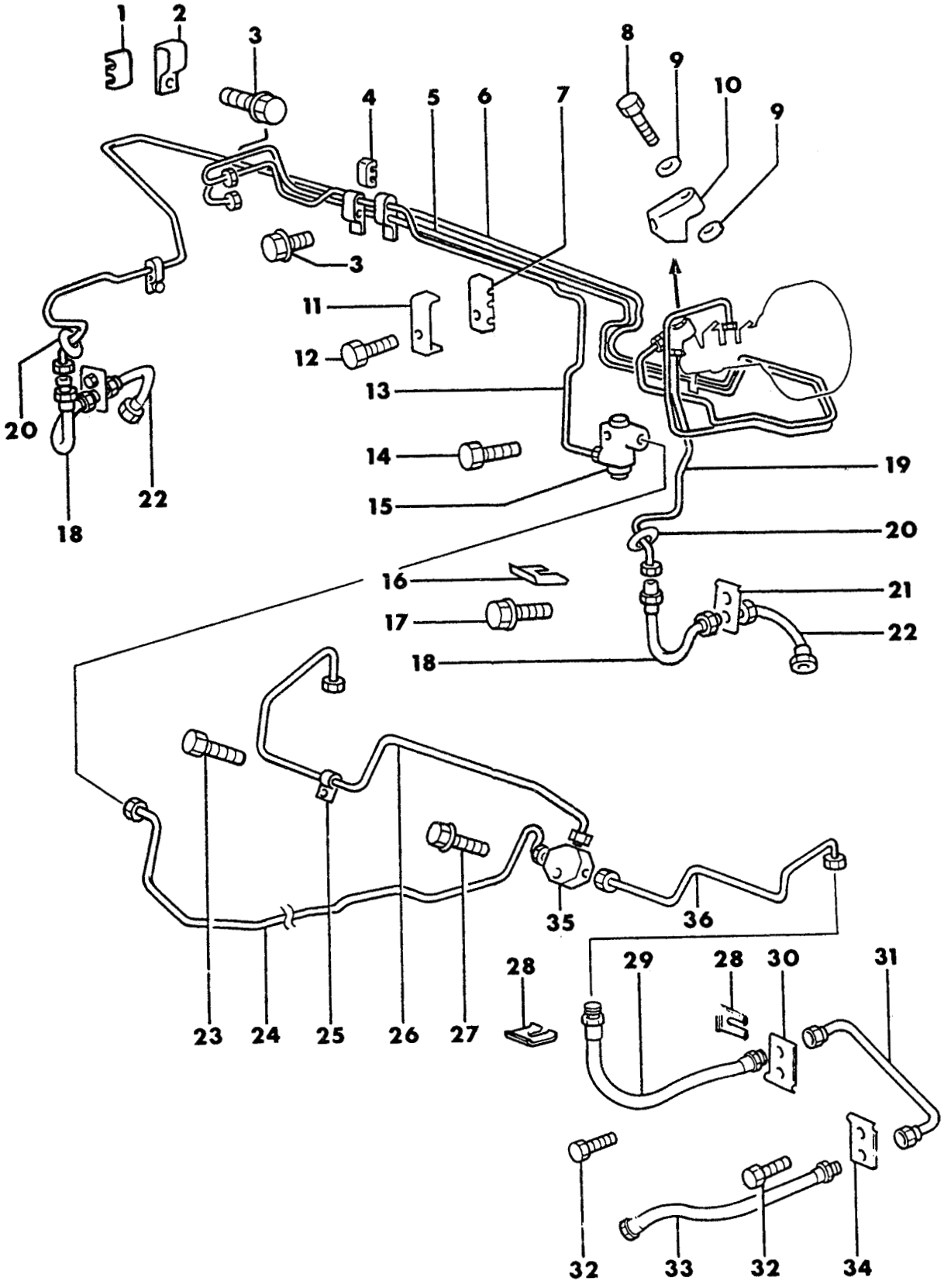

NOT FOR RESALE - UNKNOWN SOURCE - DOWNLOADED FOR FREE FROM:
WWW.STARQUESTGARAGE.COM

ITEM	PART NUMBER	QTY	BODY	MODEL	DESCRIPTION
					LINES AND HOSES, BRAKE
					24, CONQUEST (W/ANTI-SKID)
1	MB08 2164	4			CLIP
2	MB15 1280	3			CLAMP
3	MF24 0024	3			BOLT, w/Washer (6x14)
4	MB12 9999	2			CLIP
5	MB23 8366	1			TUBE, Brake
6	MB27 7339	1			TUBE, Brake Frt., Rt.
7	MB08 1826	1			CLIP, Tube
8	MB04 4861	1			BOLT, Connector
9	MA11 1832	2			GASKET
10	MB04 3947	1			CONNECTOR
11	MB08 1827	1			HOLDER, Clip
12	MF10 0029	1			BOLT, w/Washer (6x22)
13	MB23 8367	1			TUBE, Brake (5 Stud)
14	MF24 1236	1			BOLT, w/Washer (6x40)
15	MB08 2428	1			VALVE, Proportioning
	MB05 8447	1			VALVE, Proportioning, w/Turbo, 1987
16	MA43 1825	4			CLIP, Hose
17	MF24 0050	2			BOLT, w/Washer (8x14)
18	MB23 8154	2			HOSE, Brake
19	MB27 7338	1			TUBE, Brake Frt., Lt.
20	MS81 0053	2			GROMMET, (6)
21	MB19 3591	2			PLATE, Brake
22	MB23 8151	2			HOSE, Brake
23	MS24 0141	3			BOLT, w/Washer (6x16)
24	MB18 1781	1			PIPE
25	MB04 4570	3			CLIP
26	MB19 3445	1			TUBE, Brake
27	MF14 0027	1			BOLT, w/Washer (8x30)
28	MA43 1825	6			CLIP, Hose
29	MB23 8160	2			HOSE, Brake
30	MB23 8255	2			PLATE, Brake
31	MB23 8252	1			TUBE, Brake Rear, Lt.
	MB23 8253	1			TUBE, Brake Rear, Rt.
32	MF24 0050	4			BOLT, w/Washer (8x14)
33	MB23 8153	2			HOSE, Brake (4 Stud), 1987
	MB23 8159	2			HOSE, Brake (5 Stud)
34	MB19 3591	2			PLATE, Brake
35	MB05 8210	1			CONNECTOR, 3-Way
36	MB19 3444	1			TUBE

NOT FOR RESALE - UNKNOWN SOURCE - DOWNLOADED FOR FREE FROM:
WWW.STARQUESTGARAGE.COM

MODULATOR, ANTI-SKID
24, CONQUEST

7705 2100

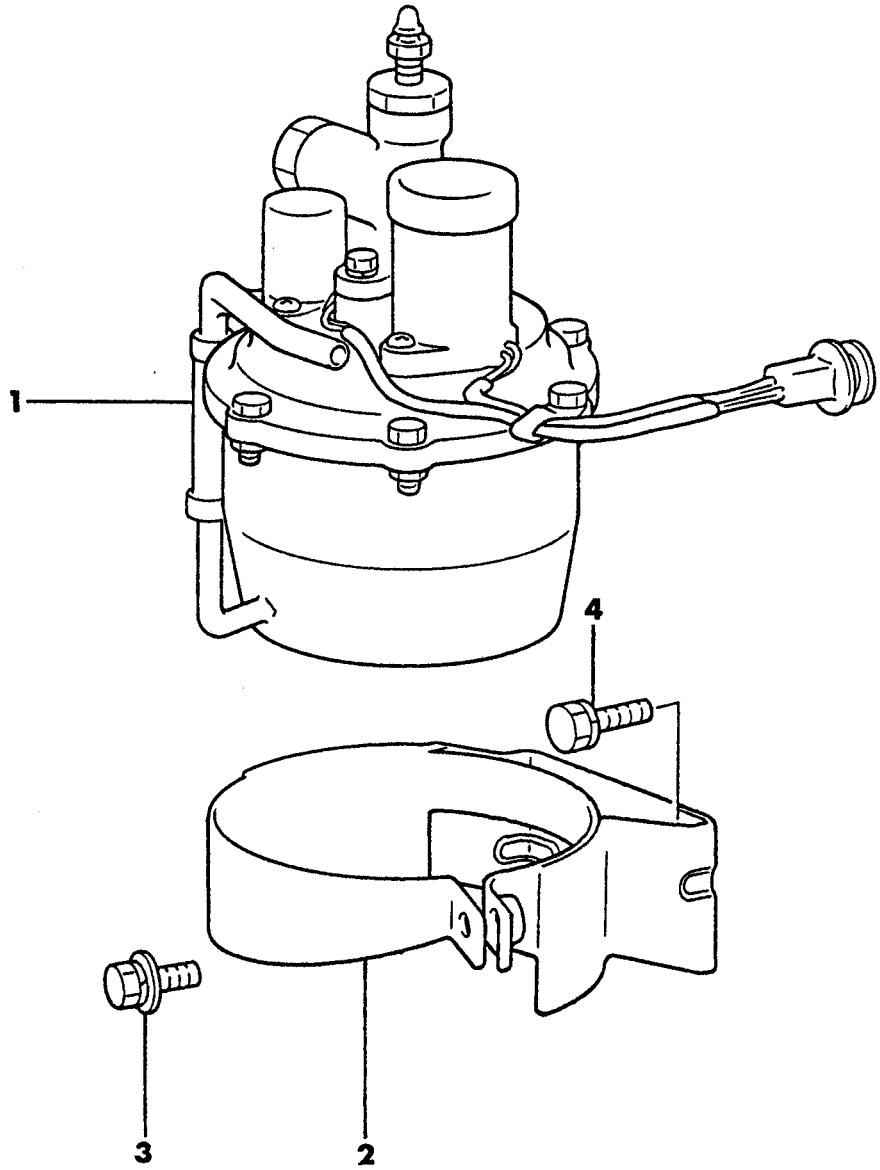

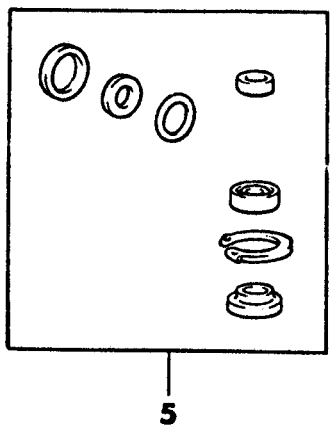

NOT FOR RESALE - UNKNOWN SOURCE - DOWNLOADED FOR FREE FROM:
WWW.STARQUESTGARAGE.COM

ITEM	PART NUMBER	QTY	BODY	MODEL	DESCRIPTION
			MODULATOR, ANTI-SKID 24, CONQUEST		
1	MB19 3085	1			MODULATOR
2	MB23 8415	1			BAND
3	MF24 3651	1			BOLT, w/Washer (8x20), 1987
	MS24 0126	1			BOLT, w/Washer (8x20), 1988
4	MF24 0049	4			BOLT, w/Washer (8x12)
5	MB36 6398	1			REPAIR KIT, Modulator, 1987
	MB58 7018	1			REPAIR KIT, Modulator, 1988

NOT FOR RESALE - UNKNOWN SOURCE - DOWNLOADED FOR FREE FROM:
WWW.STARQUESTGARAGE.COM

BRAKES FRONT
24, CONQUEST

7705 2900

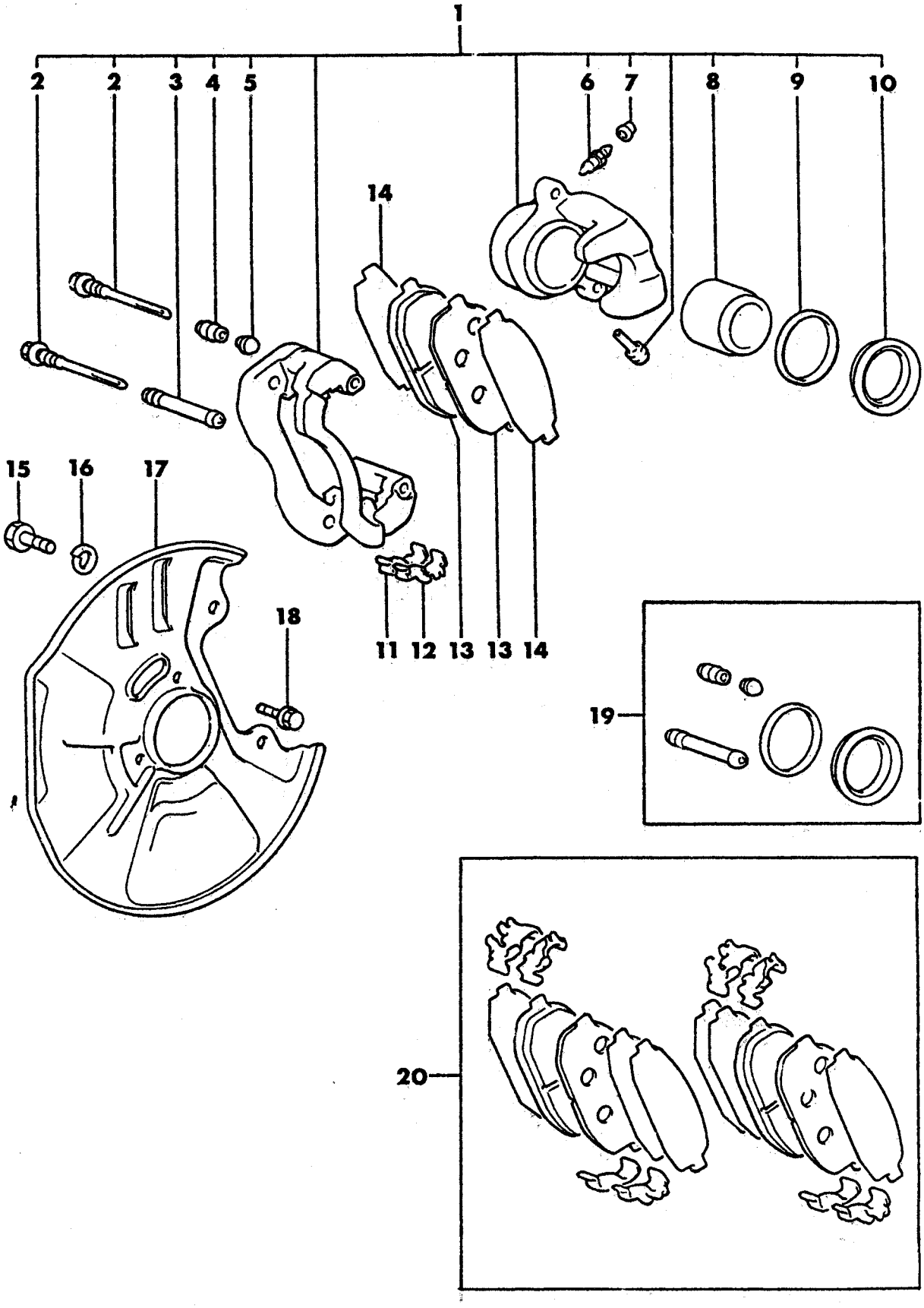

NOT FOR RESALE - UNKNOWN SOURCE - DOWNLOADED FOR FREE FROM:
WWW.STARQUESTGARAGE.COM

ITEM	PART NUMBER	QTY	BODY	MODEL	DESCRIPTION
					BRAKES FRONT
					24, CONQUEST
1	MB23 8248	1			CALIPER KIT, Rt. (4 Stud), 1987
	MB31 6426	1			CALIPER KIT, Rt. (5 Stud)
	MB23 8247	1			CALIPER KIT, Lt. (4 Stud), 1987
	MB31 6425	1			CALIPER KIT, Lt. (5 Stud)
2	MB19 3958	4			PIN, Slide
3					BUSHING, Slide Pin (Serv. Kit)
4					BOOT, Slide Pin (Serv. Kit)
5					CAP, Plug (Serv. Kit)
6	MA16 9990	2			SCREW, Bleeder
7	MA14 0440	2			CAP, Bleeder
8	MB19 3954	2			PISTON
9					SEAL, Piston (Serv. Kit)
10					BOOT, Dust (Serv. Kit)
11	MB19 3963	4			RETAINER, Pad
12	MB19 3962	4			RETAINER, Pad
13					PAD, (Serv. Kit)
14					SHIM, Outer (Serv. Kit)
15	MB15 1403	4			BOLT
16	MF45 0407	4			WASHER, Spring (12)
17	MB15 1401	1			COVER, Dust LT.
	MB15 1402	1			COVER, Dust RT.
18	MF14 0020	6			BOLT, Flange (8x10)
19	MB23 8249	2			SEAL and BOOT KIT
20	MB50 0465	1			PAD KIT

NOT FOR RESALE - UNKNOWN SOURCE - DOWNLOADED FOR FREE FROM:
WWW.STARQUESTGARAGE.COM

BRAKE DISC AND BEARINGS, FRONT
24, CONQUEST

7705 3000 A

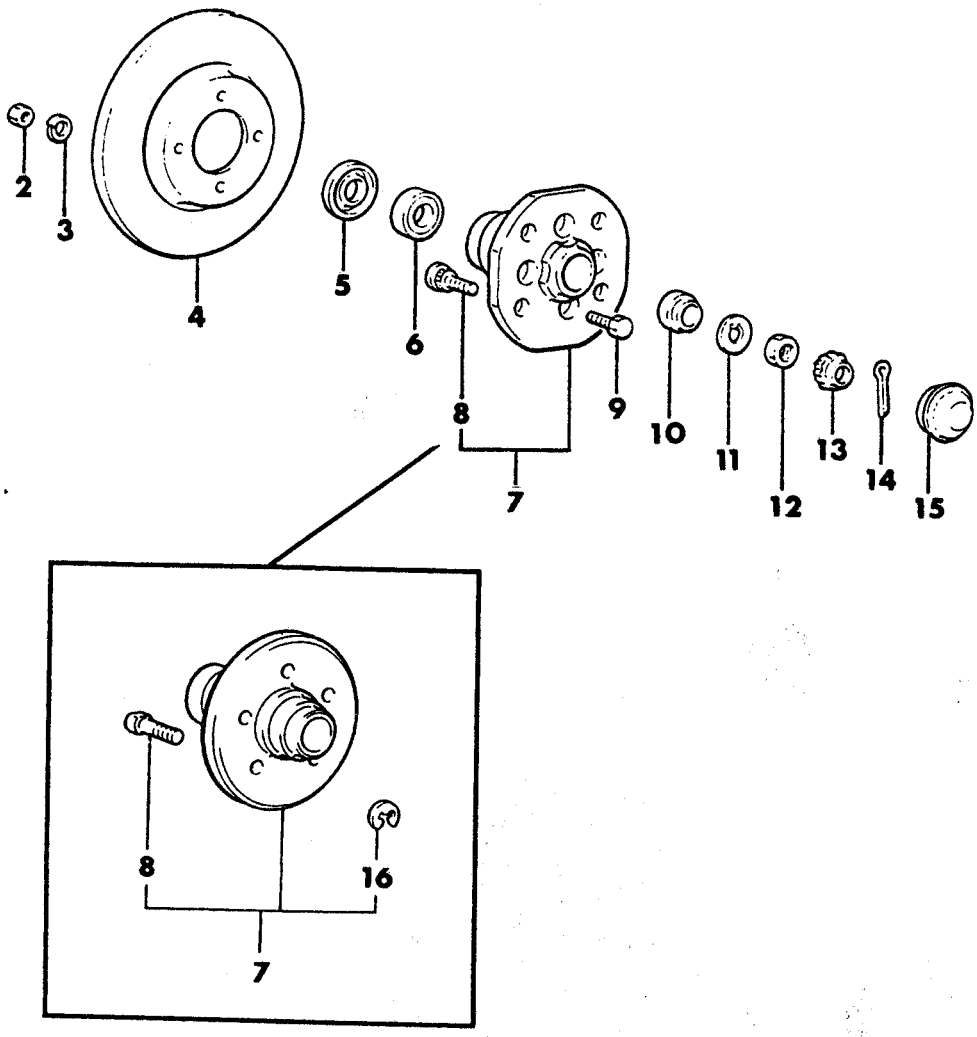

NOT FOR RESALE - UNKNOWN SOURCE - DOWNLOADED FOR FREE FROM:
WWW.STARQUESTGARAGE.COM

ITEM	PART NUMBER	QTY	BODY	MODEL	DESCRIPTION
					BRAKE DISC AND BEARINGS, FRONT 24, CONQUEST
2	MF43 0122	8			NUT, (10), 1987
3	MF45 0406	8			WASHER, Spring (10), 1987
4	MB15 1400	2			DISC, Brake Front (4 Stud), 1987
	MB36 6486	2			DISC, Brake Front (5 Stud)
5	MB00 2074	2			OIL SEAL
6	MB00 2072	2			BEARING, Inner
7	MB17 5648	2			HUB, Front (4 Stud), 1987
	MB34 9461	2			HUB, Front (5 Stud)
8	MB30 1529	8			BOLT, Hub (4 Stud), 1987
	MB34 9394	10			BOLT, Hub (5 Stud)
9	MA12 5247	8			BOLT, 1987
10	MB00 2073	2			BEARING, Outer
11	MB00 1769	2			WASHER
12	MB17 6915	2			NUT
13	MA12 5855	2			CAP
14	MF47 2087	2			PIN, (4x40)
15	MB00 2067	2			CAP, Hub
16	MF52 2408	10			SNAP-RING, (5 Stud)

NOT FOR RESALE - UNKNOWN SOURCE - DOWNLOADED FOR FREE FROM:
WWW.STARQUESTGARAGE.COM

BRAKES REAR
24, CONQUEST

7705 3900

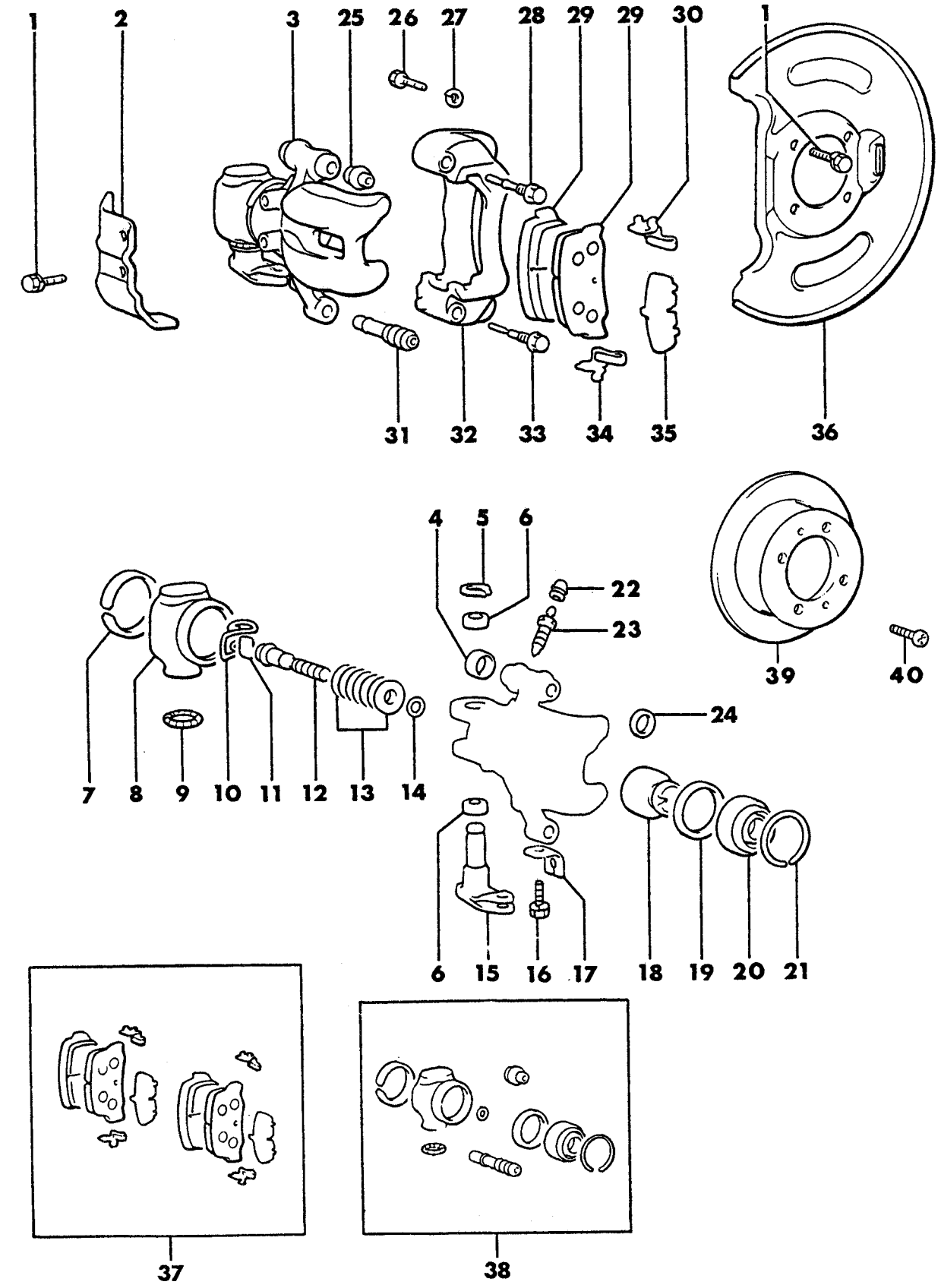

NOT FOR RESALE - UNKNOWN SOURCE - DOWNLOADED FOR FREE FROM:
WWW.STARQUESTGARAGE.COM

ITEM	PART NUMBER	QTY	BODY	MODEL	DESCRIPTION
					BRAKES REAR
					24, CONQUEST
1	MF14 0020	2			BOLT, Flange (8x10)
2	MB19 3428	1			COVER, Dust LT.
	MB19 3429	1			COVER, Dust RT.
3	MB19 3820	1			BODY and PISTON, LT.
	MB19 3821	1			BODY and PISTON, RT.
4	MB23 8138	2			LID, 1987
5	MB08 1613	2			RING, Retaining
6	MB08 1609	4			BEARING
7					RING, Cap (Serv. Kit)
8					CAP, Lever (Serv. Kit)
9					SPRING, Garter (Serv. Kit)
10	MB08 1585	2			SPRING, Return
11	MB08 1608	2			LINK, Connecting
12	MB08 1607	2			SPINDLE
13	MB13 4689	14			WASHER, Spring
14					SEAL, Spindle (Serv. Kit)
15	MB13 4692	1			LEVER, Parking LT.
	MB13 4693	1			LEVER, Parking RT.
16	MB13 4690	2			BOLT
17	MB13 4691	2			BRACKET, P/Cable
18	MB23 8135	2			PISTON
19					SEAL, Piston (Serv. Kit)
20					BOOT, Piston (Serv. Kit)
21					RING, Boot (Serv. Kit)
22	MV02 6287	2			CAP, Bleeder
23	MB36 6146	2			SCREW, Bleeder
24	MB23 8139	2			RETAINER, Boot, 1987
25					BOOT, Guide Pin (Serv. Kit)
26	MB05 8535	4			BOLT
27	MF45 0406	4			WASHER, Spring (10)
28	MB19 3824	2			PIN, Guide
29					PAD, Brake (Serv. Kit)
30	MB19 3829	4			CLIP, Pad
31					BOOT, Lock Pin (Serv. Kit)
32	MB19 3822	1			SUPPORT, Caliper LT. (4 Stud), 1987
	MB31 6418	1			SUPPORT, Caliper LT. (5 Stud)
	MB19 3823	1			SUPPORT, Caliper RT. (4 Stud)
	MB31 6419	1			SUPPORT, Caliper RT. (5 Stud)
33	MB19 3826	2			PIN, Lock
34	MB19 3828	4			CLIP, Pad
35					SHIM, (Serv. Kit)
36	MB15 1407	2			COVER, Dust
37	MB23 8250	1			PAD KIT
38	MB23 8251	2			SEAL and BOOT KIT
39	MB15 1406	2			DISC, Rear (4 Stud), 1987
	MB36 6487	2			DISC, Rear (5 Stud), 1987
	MB53 4649	2			DISC, Rear (5 Stud), 1988
40	MF20 1572	2			SCREW, (6X12)

NOT FOR RESALE - UNKNOWN SOURCE - DOWNLOADED FOR FREE FROM:
WWW.STARQUESTGARAGE.COM